CHAPTER 9

Parts List

Serial No. 140000 - Present & 3975 - Present

9.1 Drawing List

1. "1060 Tube Assembly" on page 86
2. "1070 Tube Assembly" on page 88
3. "1080 Tube Assembly" on page 90
4. "Boot Assembly - All Sizes" on page 92
5. "Undercarriage Parts - All Sizes" on page 94
6. "Common Parts - All Sizes" on page 96
7. "Auger Tube Decals" on page 98
8. "Swing Tube & Spout Assembly" on page 100
9. "Swing Hopper Assembly" on page 102
10. "Swing Hopper Drive" on page 104
11. "PTO Shaft Breakdown" on page 106 & 107
12. "Upper Swing Tube Gearbox Breakdown" on page 108
13. "Lower Swing Tube Gearbox Breakdown" on page 109
14. "Reversing Kit" on page 110

1060 Tube Assembly

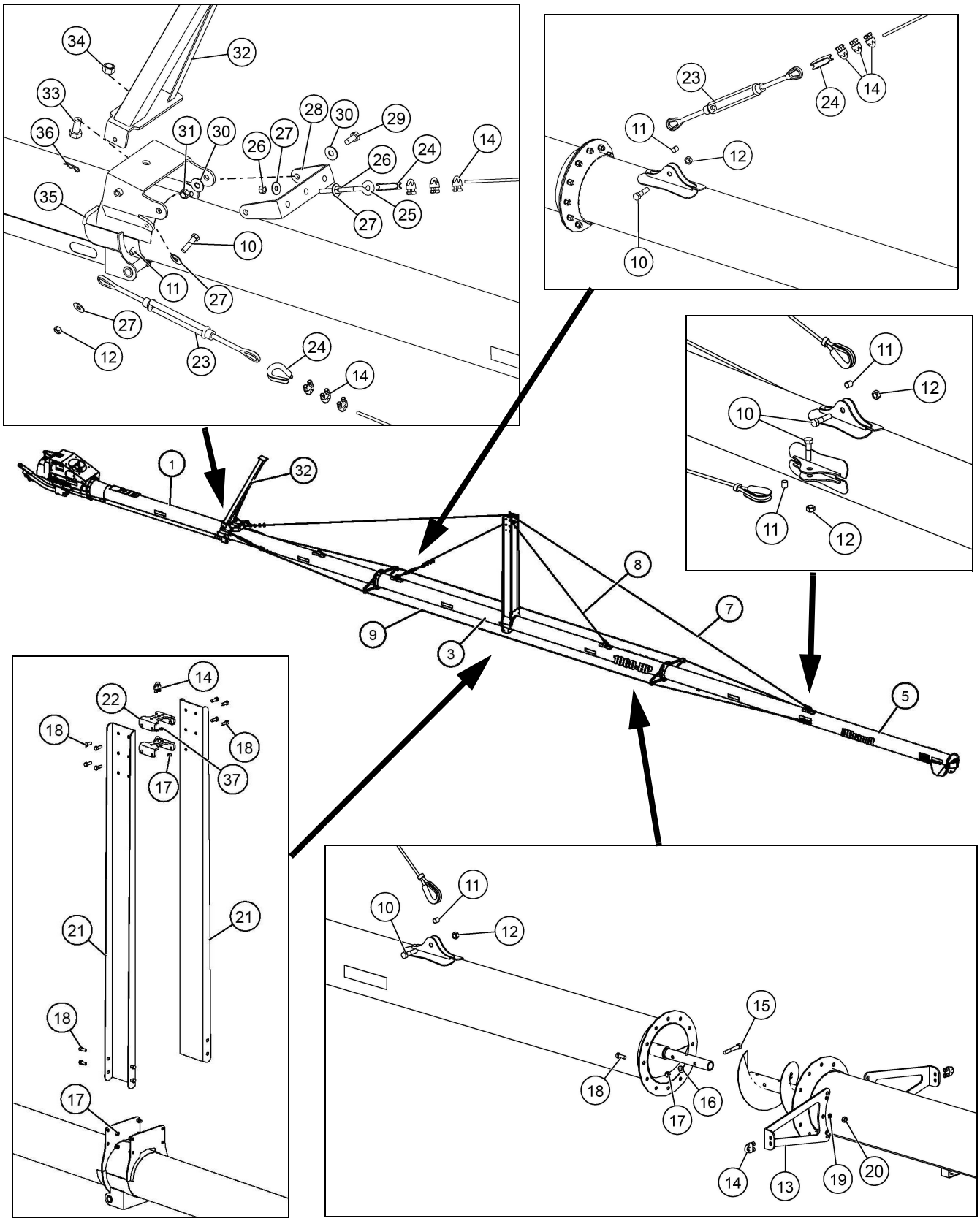

REF #	PART NO.	DESCRIPTION	QTY
1	2065447	LOWER TUBE WELDMENT	1
2	2066820	LOWER TUBE FLIGHT WELDMENT	1
3	2065449	SECOND TUBE WELDMENT	1
4	2066808	SECOND TUBE FLIGHT WELDMENT	1
5	2065461	UPPER TUBE WELDMENT	1
6	2066814	UPPER TUBE FLIGHT WELDMENT	1
7	B0083081	TRUSS CABLE - 3/8" x 43'	1
8	B008312	TRUSS CABLE - 3/8" x 19.5'	1
9	B0083081	TRUSS CABLE - 3/8" x 43'	2
10	8000487	5/8" x 2 1/2" BOLT - GR.5	7
11	B002311	5/8" ID SPACER x 3/4" LONG	7
12	8000061	5/8" LOCK NUT	7
13	2064513	SIDE TRUSS MOUNT	4
14	B008080	3/8" CABLE CLAMP	18
15	8000414	1/2" x 3 1/4" BOLT - GR.5	6
16	8001118	1/2" SAE FLAT WASHER	6
17	8015210	1/2" LOCK NUT	22
18	8023370	1/2" x 1 1/4" BOLT	40
19	8001122	1/2" FLAT WASHER	24
20	8000775	1/2" HEX NUT	24
21	2064511	MAIN TRUSS UPRITE	2
22	2064512	TRUSS TOWER SUPPORT	2
23	B00847	5/8" x 12" TURN BUCKLE	3
24	B008081	3/8" CABLE THIMBLE	4
25	B0020246	5/8" x 9 3/8" EYE BOLT	1
26	8000796	5/8" HEX NUT	2
27	8001127	5/8" FLAT WASHER	6
28	2066980	SWIVEL CABLE MOUNT	1
29	8014187	3/4" x 1 3/4" BOLT - GR.5	2
30	8001135	3/4" FLAT WASHER	4
31	8023319	3/4" LOCK NUT	2
32	C310303	LIFT ARM	1
33	8000600	1" x 2" BOLT - GR.5	1
34	8000064	1" LOCK NUT	1
35	B0020297	1/2" x 2 3/4" L-PIN	1
36	B002094	1/8" x 2 9/16" HAIR PIN CLIP	1
37	8001100	3/8" SAE FLAT WASHER	4

1070 Tube Assembly

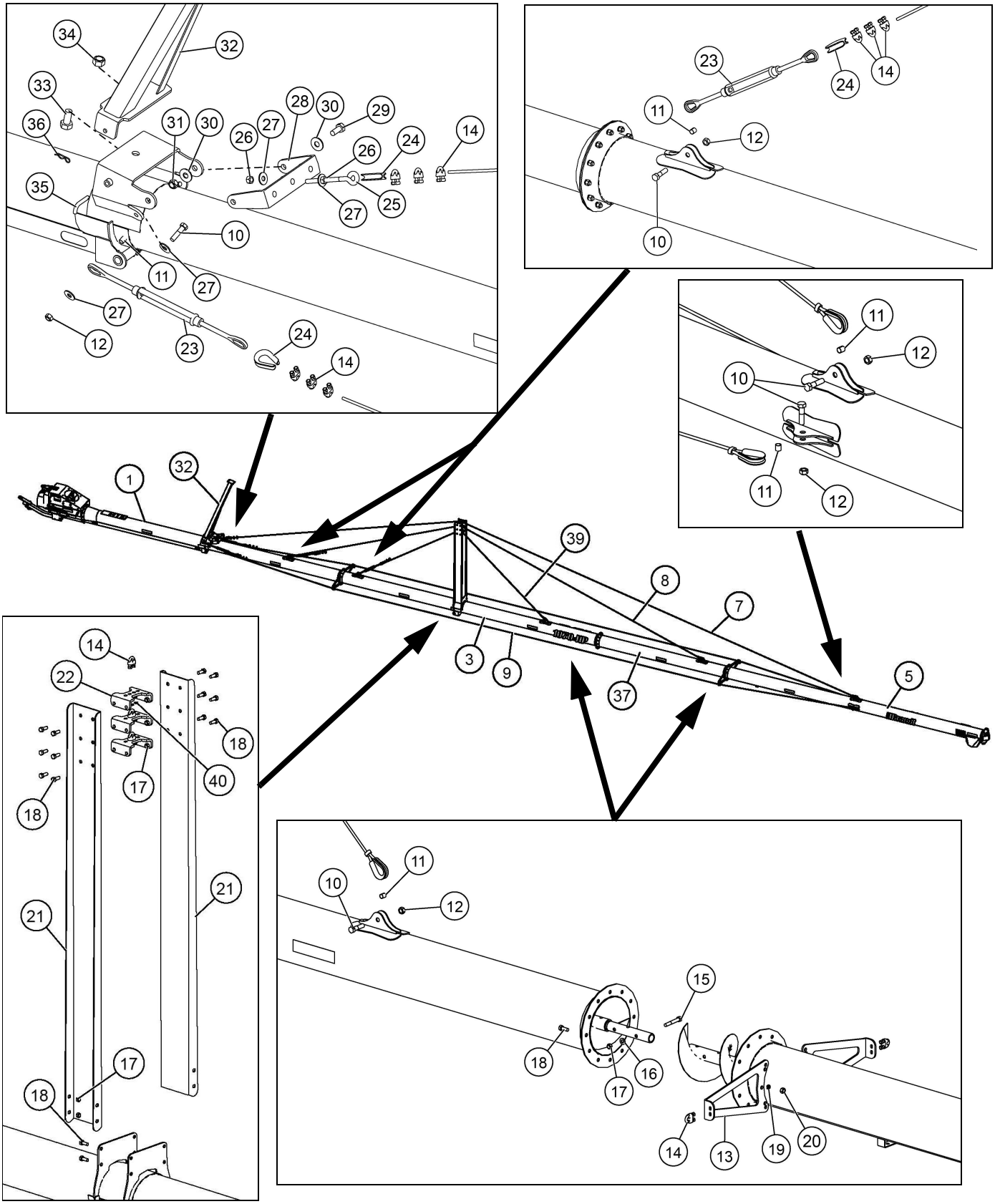

REF #	PART NO.	DESCRIPTION	QTY
1	2065447	LOWER TUBE WELDMENT	1
2	2066820	LOWER TUBE FLIGHT WELDMENT	1
3	2065449	SECOND TUBE WELDMENT	1
4	2066808	SECOND TUBE FLIGHT WELDMENT	1
5	2065461	UPPER TUBE WELDMENT	1
6	2066814	UPPER TUBE FLIGHT WELDMENT	1
7	B008108	TRUSS CABLE - 3/8" x 55'	1
8	B0083082	TRUSS CABLE - 3/8" x 35'	1
9	B008108	TRUSS CABLE - 3/8" x 55'	2
10	8000487	5/8" x 2 1/2" BOLT - GR.5	8
11	B002311	5/8" ID SPACER x 3/4" LONG	8
12	8000061	5/8" LOCK NUT	8
13	2064513	SIDE TRUSS MOUNT	4
14	B008080	3/8" CABLE CLAMP	22
15	8000414	1/2" x 3 1/4" BOLT - GR.5	9
16	8001118	1/2" SAE FLAT WASHER	9
17	8015210	1/2" LOCK NUT	25
18	8023370	1/2" x 1 1/4" BOLT	52
19	8001122	1/2" FLAT WASHER	36
20	8000775	1/2" HEX NUT	36
21	2064511	MAIN TRUSS UPRITE	2
22	2064512	TRUSS TOWER SUPPORT	3
23	B00847	5/8" x 12" TURN BUCKLE	4
24	B008081	3/8" CABLE THIMBLE	5
25	B0020246	5/8" x 9 3/8" EYE BOLT	1
26	8000796	5/8" HEX NUT	2
27	8001127	5/8" FLAT WASHER	6
28	2066980	SWIVEL CABLE MOUNT	1
29	8014187	3/4" x 1 3/4" BOLT - GR.5	2
30	8001135	3/4" FLAT WASHER	4
31	8023319	3/4" LOCK NUT	2
32	C310303	LIFT ARM	1
33	8000600	1" x 2" BOLT - GR.5	1
34	8000064	1" LOCK NUT	1
35	B0020297	1/2" x 2 3/4" L-PIN	1
36	B002094	1/8" x 2 9/16" HAIR PIN CLIP	1
37	2065462	THIRD TUBE WELDMENT	1
38	2066795	THIRD TUBE FLIGHT WELDMENT	1
39	B008312	TRUSS CABLE - 3/8" x 19.5'	1
40	8001100	3/8" SAE FLAT WASHER	6

1080 Tube Assembly

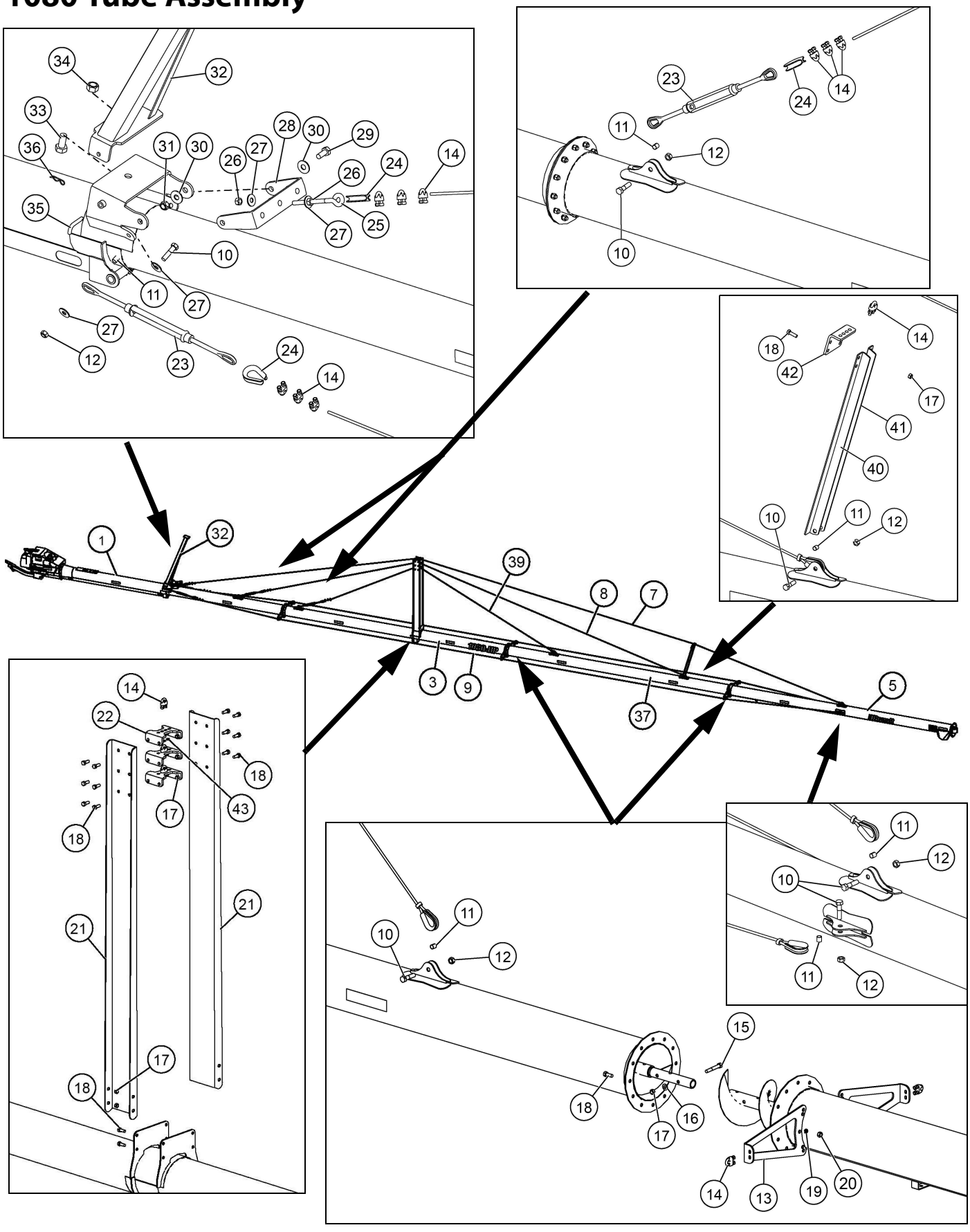

Ref #	Part No.	Description	Qty
1	2065447	LOWER TUBE WELDMENT	1
2	2066820	LOWER TUBE FLIGHT WELDMENT	1
3	2065460	SECOND TUBE WELDMENT	1
4	2066808	SECOND TUBE FLIGHT WELDMENT	1
5	2065461	UPPER TUBE WELDMENT	1
6	2066814	UPPER TUBE FLIGHT WELDMENT	1
7	2066537	TRUSS CABLE - 3/8" x 62'	1
8	B0083081	TRUSS CABLE - 3/8" x 43'	1
9	2066537	TRUSS CABLE - 3/8" x 62'	2
10	8000487	5/8" x 2 1/2" BOLT - GR.5	8
11	B002311	5/8" ID SPACER x 3/4" LONG	8
12	8000061	5/8" LOCK NUT	8
13	2064513	SIDE TRUSS MOUNT	6
14	B008080	3/8" CABLE CLAMP	25
15	8000414	1/2" x 3 1/4" BOLT - GR.5	9
16	8001118	1/2" SAE FLAT WASHER	9
17	8015210	1/2" LOCK NUT	29
18	8023370	1/2" x 1 1/4" BOLT	56
19	8001122	1/2" FLAT WASHER	36
20	8000775	1/2" HEX NUT	36
21	2064511	MAIN TRUSS UPRITE	2
22	2064512	TRUSS TOWER SUPPORT	3
23	B00847	5/8" x 12" TURN BUCKLE	4
24	B008081	3/8" CABLE THIMBLE	5
25	B0020246	5/8" x 9 3/8" EYE BOLT	1
26	8000796	5/8" HEX NUT	2
27	8001127	5/8" FLAT WASHER	6
28	2066980	SWIVEL CABLE MOUNT	1
29	8014187	3/4" x 1 3/4" BOLT - GR.5	2
30	8001135	3/4" FLAT WASHER	4
31	8023319	3/4" LOCK NUT	2
32	C310303	LIFT ARM	1
33	8000600	1" x 2" BOLT - GR.5	1
34	8000064	1" LOCK NUT	1
35	B0020297	1/2" x 2 3/4" L-PIN	1
36	B002094	1/8" x 2 9/16" HAIR PIN CLIP	1
37	2065463	THIRD TUBE WELDMENT	1
38	2066808	THIRD TUBE FLIGHT WELDMENT	1
39	B0083084	TRUSS CABLE - 3/8" x 25'	1
40	2064508	SHORT TRUSS UPRITE - RIGHT	1
41	2064506	SHORT TRUSS UPRITE - LEFT	1
42	2064510	TOWER TOP MOUNT	1
43	8001100	3/8" SAE FLAT WASHER	6

Intake Boot Assembly - All Sizes

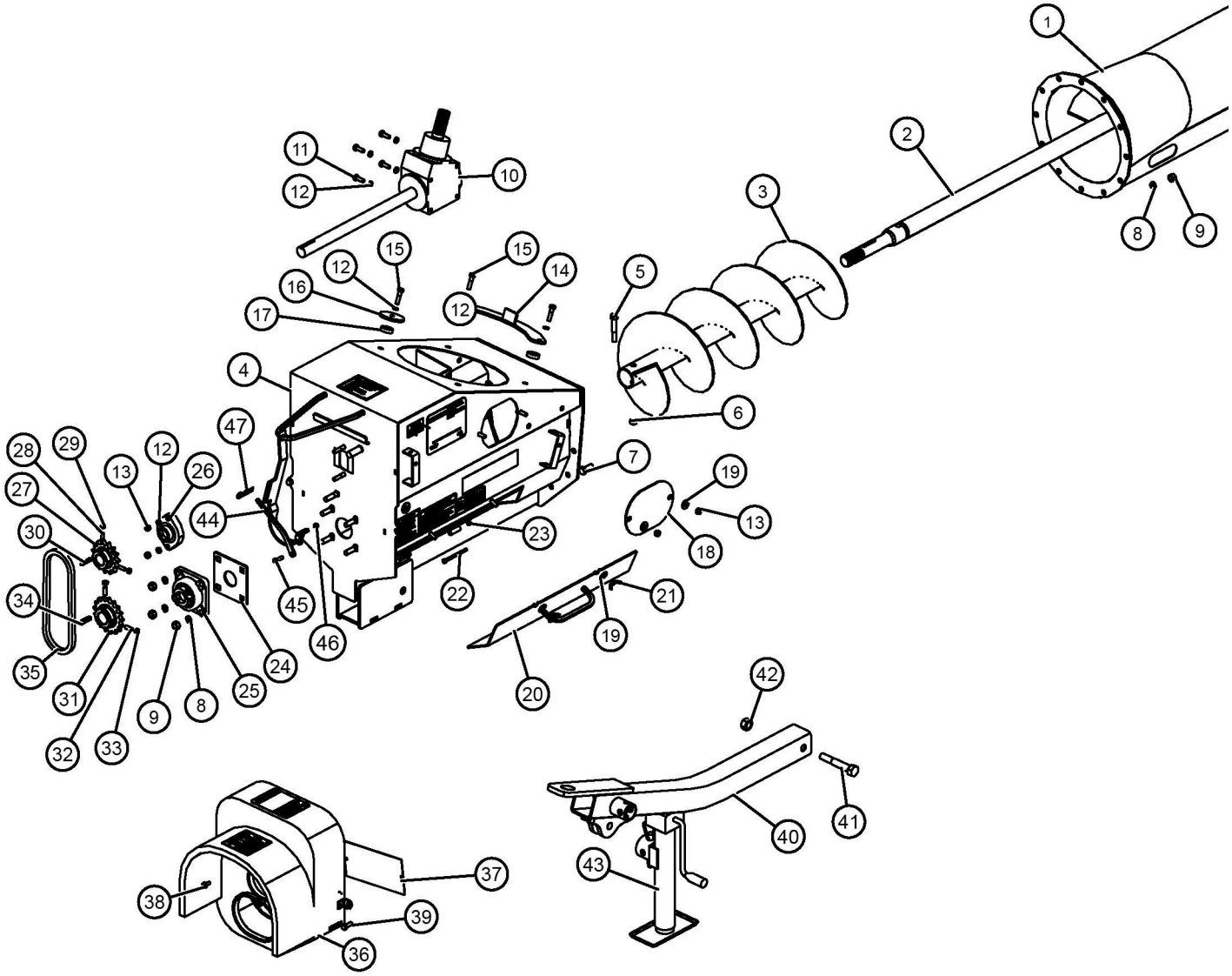

REF #	PART NO.	DESCRIPTION	QTY
1	2065447	LOWER TUBE WELDMENT	1
2	2066820	LOWER FLIGHT WELDMENT	1
3	C116439	10" HP BOOSTER FLIGHT	1
4	C116431A	10" HP BOOT c/w DECALS	1
5	8000411	1/2" x 3" BOLT - GR.8	1
6	8015210	1/2" STOVER LOCK NUT	1
7	8023370	1/2" x 1 1/4" BOLT	13
8	8001122	1/2" LOCK WASHER	20
9	8000775	1/2" HEX NUT	20
10	B003110	10" HP BOOT GEARBOX	1
11	8000237	3/8" x 1" BOLT	4
12	8001107	3/8" LOCK WASHER	10
13	8000755	3/8" HEX NUT	4
14	C100872	SWING TUBE STOP	1
15	8000250	3/8" x 1 1/2" BOLT	4
16	B198361	LARGE SWING TUBE RETAINER	2
17	C100889	SMALL SWING TUBE RETAINER	4
18	C116471	ACCESS COVER	1
19	8001100	3/8" FLAT WASHER	4
20	C116473	10" HP BOOT CLEANOUT DOOR	1
21	8000764	3/8" WING NUT	2
22	8000156	1/4" x 3 1/2" BOLT	2
23	8000731	1/4" LOCK NUT	4
24	B194335	10" INNER SPACER PLATE	1
25	B017160	1 3/8" BEARING - 4 BOLT FLANGE	1
26	B017200	1 1/4" BEARING - 2 BOLT FLANGE	1
27	B0090085	60-15 SPROCKET - 1 1/4" BORE	1
28	8000960	5/16" x 1" SET SCREW	2
29	8000743	5/16" JAM NUT	2
30	B689169	1/4" KEY x 1 1/2" LONG	1
31	B009028	60-17 SPROCKET x 1 3/8" BORE	1
32	8000972	3/8" x 1" SET SCREW	2
33	8000760	3/8" JAM NUT	2
34	B194012	5/16" KEY x 1 1/2" LONG	1
35	B0090131	R60 CHAIN x 39 PITCH	1
36	B027504A	DRIVE GUARD c/w DECALS	1
37	B199007	540 COVER PLATE	1
38	8000959	5/16" x 3/4" THREAD CUTTING SCREW	2
39	8000237	3/8" x 1" BOLT	2
40	C116527	10" HP HITCH TUBE	1
41	8000560	3/4" x 4 1/2" BOLT	1
42	8000809	3/4" LOCK NUT	1
43	B030500	IMPLEMENT JACK - 5000 LB SIDE WIND	1
44	C305026	PTO CLASP	1
45	8000177	5/16" x 1" BOLT - GR.5	1
46	8000056	5/16" LOCK NUT	1
47	B002094	HAIR PIN CLIP	1

Undercarriage Parts - All Sizes

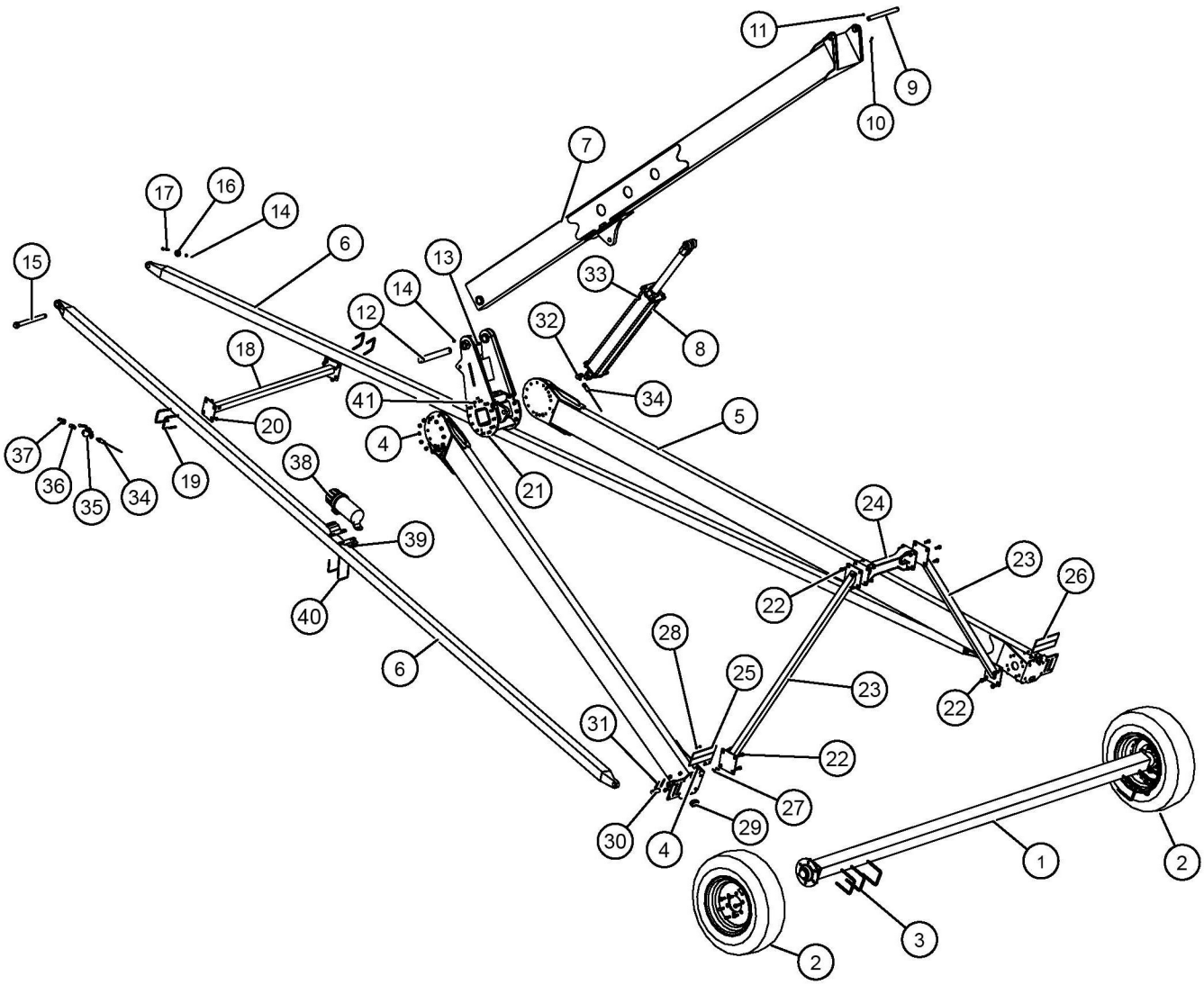

REF #	PART NO.	DESCRIPTION	QTY
1	C116525A	AXLE ASSEMBLY - 5 BOLT HUB - 1060 & 70	1
1	C116410A	AXLE ASS'Y - 6 BOLT HUB - 1080 (1060 & 70 HD)	1
2	B011209	205/75D15 6 PLY TIRE (5 BOLT RIM	2
2	B011221	ST225/75R15 8 PLY TIRE & 6 BOLT RIM	2
3	B0020177	1/2" x 4" U-BOLT x 5" LG	6
4	8015210	1/2" STOVER LOCK NUT	52
5	C116407	LIFT ARM WELD - 1060 & 70	2
5	C116507	LIFT ARM WELD - 1080	2
6	C116408	AXLE ARM WELD - 1060 & 70	2
6	C116508	AXLE ARM WELD - 1080	2
7	C116405A	LADDER ASS'Y - 1060 & 70	1
7	C116505A	LADDER ASS'Y - 1080	1
8	B019865	4" x 30" HYDRALIC CYINDER - 1060 & 70	1
8	B0198655	4 1/2" x 30" HYDRAULIC CYLINDER - 1080	1
9	C116506	LADDER to TUBE PIN	1
10	8000192	5/16" x 2" BOLT	2
11	8000056	5/16" LOCK NUT	2
12	C114418	LIFT CROSS PIN	1
13	8000278	3/8" x 2 3/4" BOLT	2
14	8014204	3/8" LOCK NUT	3
15	C114417	AXLE ARM to TUBE PIN	1
16	C114419	AXLE ARM to TUBE PIN BUSHING	1
17	8000261	3/8" x 2" BOLT	1
18	C114409	AXLE ARM CROSS BRACE - 1060 & 70	1
18	C116509	AXLE ARM CROSS BRACE - 1080	1
19	B0020163	3/8" x 3" U-BOLT x 4" LG	4
20	8000762	3/8" SERRATED FLANGE NUT	8
21	2077338	10" HP LIFT CROSS	1
22	8023370	1/2" x 1 1/4" BOLT	16
23	C116412	TRANSPORT UPRITE	2
24	C311277	TRANSPORT REST CROSS MEMBER	1
25	C116485	RIGHT RELECTOR ASSEMBLY	1
26	C116486	LEFT REFLECTOR ASSEMBLY	1
27	8000117	1/4" x 3/4" BOLT	4
28	8000731	1/4" LOCK NUT	4
29	B0211395	OVAL GROMMET	2
30	C114420	AXLE ARM PIN - 1" x 3" LG	2
31	B002059	5/16" x 2" ROLL PIN	4
32	B0194165	#8 MORB x #6 MJIC ADAPTER - 1/16" REST	1
33	B0193052	#8 MORB BREATHER	1
34	B019292	3/8" HYDRA. HOSE x 56' - 1060 & 70	1
34	B0192891	3/8" HYDRA. HOSE x 61' - 1080	1
35	B019300	SHUT OFF VALVE - 3/8" FPT	1
36	B019516	3/8" MPT x 1/2" MPT REDUCER NIPPLE	1
37	B019200	PIONEER MALE TIP - 1/2" FPT	1
38	B0275102	LARGE TUBE MANUAL HOLDER	1
39	C314500	MANUAL HOLDER BRACKET	2
40	B0020115	1/4" x 3" U-BOLT x 4" LG	2
41	8000371	1/2" x 1 3/4" BOLT	24

Common Parts - All Sizes

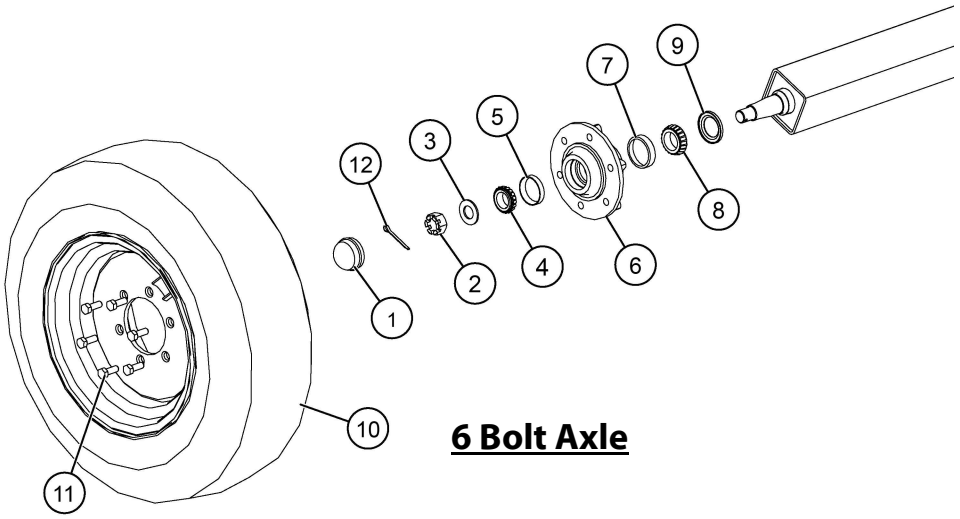

6 Bolt Axle

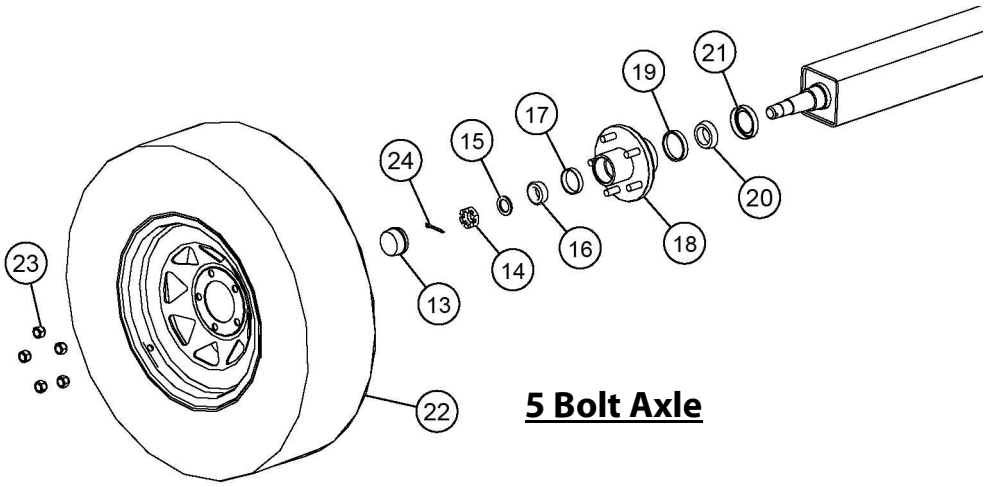

5 Bolt Axle

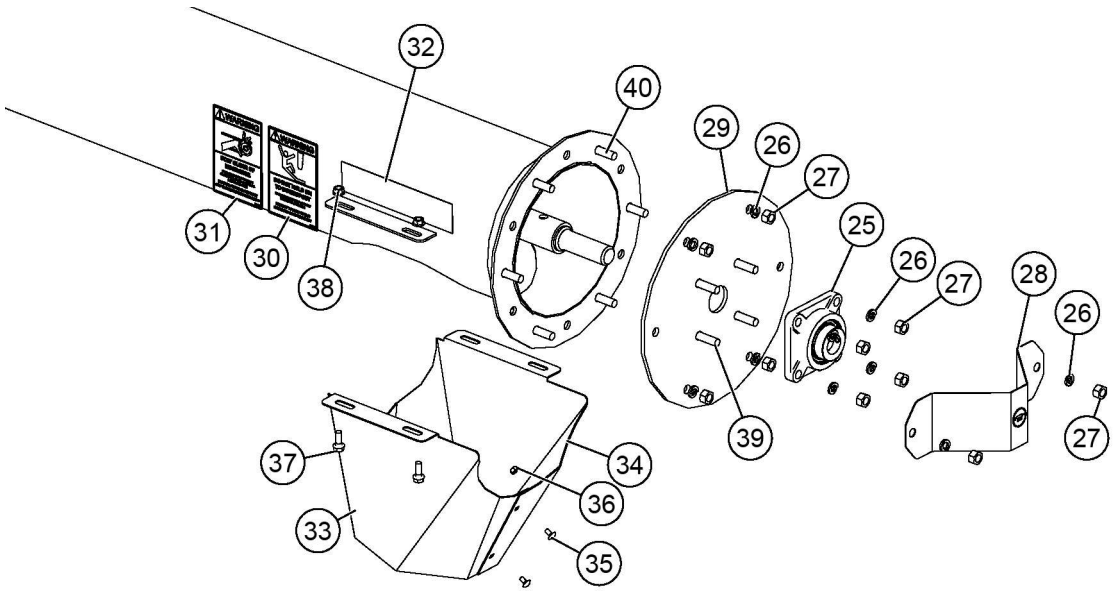

Auger Discharge End

REF #	PART NO.	DESCRIPTION	QTY
1	B011503	DUST CAP - 6 BOLT HUB	1 per hub
2	B011681	1" CASTLE NUT	1 per hub
3	B001158	1" SAE FLAT WASHER	1 per hub
4	B011603	OUTER CONE - 6 BOLT HUB - LM67048	1 per hub
5	B011602	OUTER CUP - 6 BOLT HUB - LM67010	1 per hub
6	B011003	6 BOLT HUB c/w BEARINGS	1 per hub
7	B011652	INNER CUP - 6 BOLT HUB - LM29710	1 per hub
8	B011651	INNER CONE - 6 BOLT HUB - LM29749	1per hub
9	B011650	GREASE SEAL - 6 BOLT HUB - 17617	1 per hub
10	B011221	ST225/75R15 TIRE & RIM - 1080 (60 & 70 HD)	2
11	B011504	WHEEL BOLT	6 per hub
12	B002054	3/16" x 2" COTTER PIN	1 per hub
13	B0116407	DUST CAP - 5 BOLT HUB	1 per hub
14	B001525	1" SLOT NUT	1 per hub
15	B002073	MACH. BUSHING - 1"ID x 1 1/2"OD x 1/8"	1 per hub
16	B0116405	OUTER CONE - 5 BOLT HUB - L44659	1 per hub
17	B0116404	OUTER CUP - 5 BOLT HUB - L44610	1 per hub
18	B0116401	HUB ONLY - 5 BOLT HUB	1 per hub
19	B0116402	INNER CUP - 5 BOLT HUB - L68111	1 per hub
20	B0116403	INNER CONE - 5 BOLT HUB - L68149	1 per hub
21	B0116406	GREASE SEAL - 5 BOLT HUB - 17415	1 per hub
22	B011209	ST205/75 6 PLY TIRE & 5 BOLT RIM (60 & 70)	2
23	B0116408	WHEEL NUT - 5 BOLT HUB	5 per hub
24	B002054	3/16" x 2" COTTER PIN	1 per hub
25	B017090	1 1/4" BEARING - 4 BOLT HUB	1
26	8001122	1/2" LOCK WASHER	10
27	8000775	1/2" HEX NUT	10
28	2066426	HEAD END BEARING COVER	1
29	2066422	HEAD END PLATE	1
30	B0029967	DOWNSPOUT WARNING DECAL	2
31	B029965	AUGER DISCHARGE DECAL	2
32	B0210276	2" x 9" AMBER REFLECTOR TAPE	2
33	2066432	DISCHRAGE SPOUT - RIGHT	1
34	2066433	DISCHRAGE SPOUT - LEFT	1
35	8025249	1/4" x 1/2" CARRIAGE BOLT	3
36	8000055	1/4" LOCK NUT	3
37	8000240	3/8" x 1" SERRATED FLANGE BOLT	4
38	8000763	3/8" FLANGE LOCK NUT	4
39	8000371	1/2" x 1 3/4" BOLT - GR.5	4
40	8000364	1/2" x 1 1/2" BOLT - GR.5	6

Auger Tube Decals - All Augers

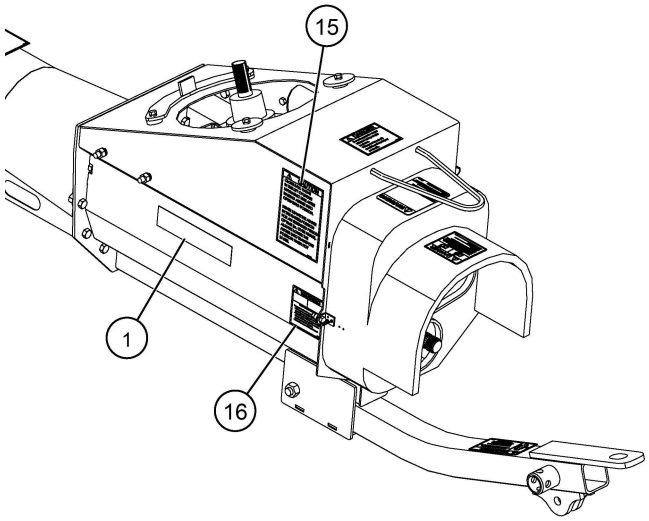

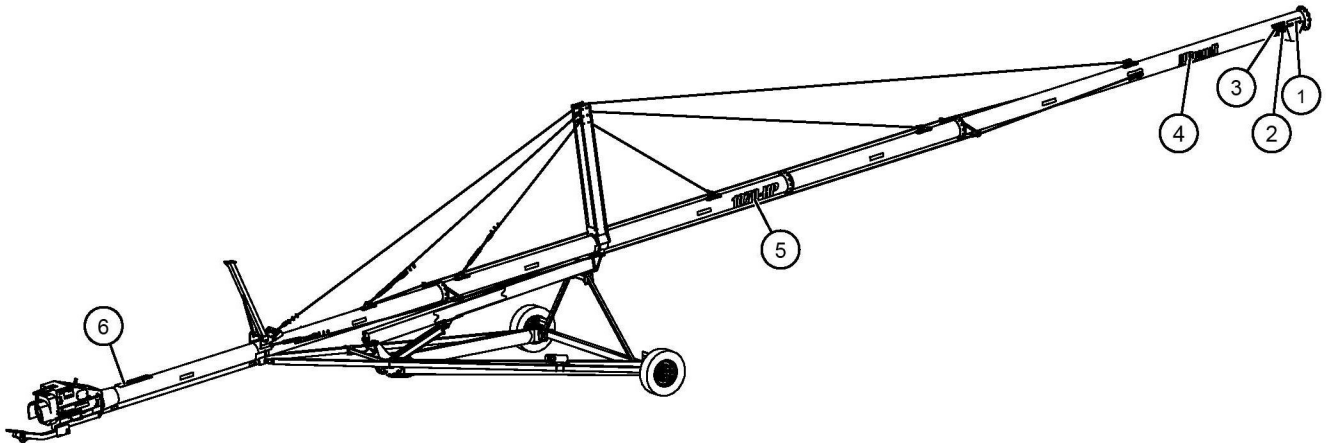

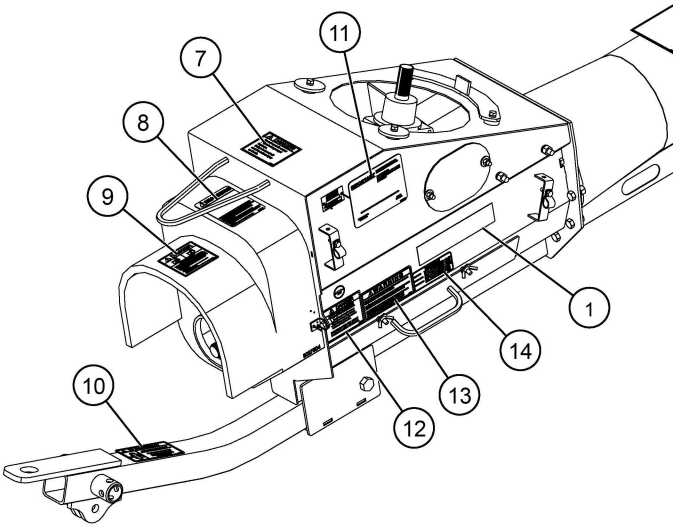

REF #	PART NO.	DESCRIPTION	QTY
1	B0210276	2" x 9" AMBER REFLECTIVE TAPE	12
2	B029967	DOWNSPOUT WARNING DECAL	2
3	B029965	AUGER DISCHARGE DECAL	2
4	B029150	LARGE 'BRANDT' DIE CUT DECAL	2
5	B029656	'1060-HP' DECAL	2
5	B029659	'1070-HP' DECAL	2
5	B029665	'1080-HP' DECAL	2
6	B029100	COMBINATION DANGER DECAL	1
7	B029410	SWING AUGER DECAL	1
8	B029340	REMOVE PTO DECAL	1
9	B029111	MOVING PARTS HAZARD DECAL	1
10	B029970	HITCH PIN DECAL	1
11	B0290615	HITCH/PTO DIMENSIONS DECAL	1
12	B029310	CLEAN OUT COVERS DECAL	1
13	B029971	SAFE TRANSPORT DECAL	1
14	B029072	10" SHEAR BOLT DECAL	1
15	B029330	NEEDLE VALVE DECAL	1
16	B029350	HYDRAULIC OIL DECAL	1

Swing Tube & Spout Parts

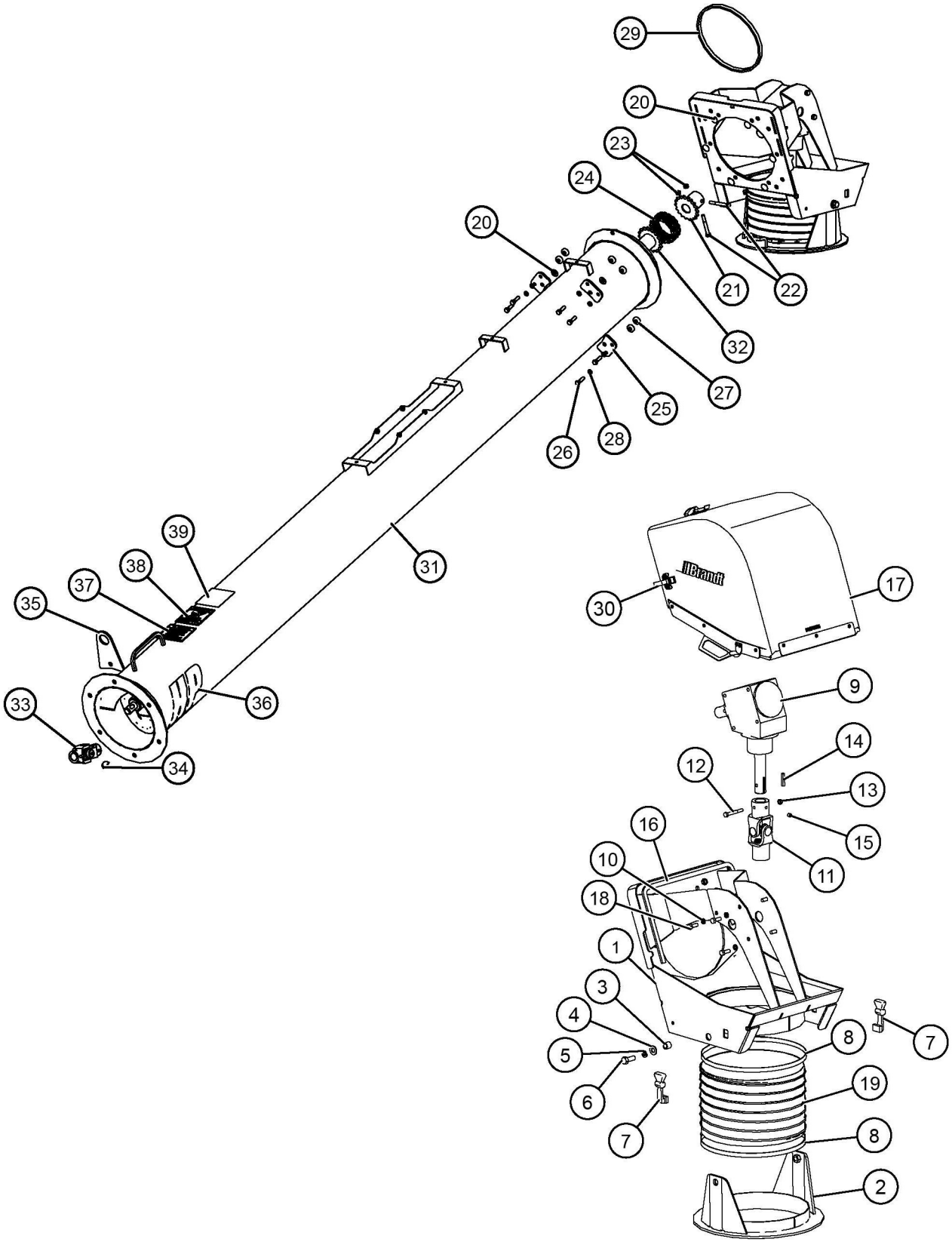

REF #	PART NO.	DESCRIPTION	QTY
1	C105867	10" SPOUT WELDMENT	1
2	C100868	LOWER SWIVEL WELDMENT	1
3	C100869	SWIVEL BUSHING	2
4	8001118	1/2" SAE FLAT WASHER	2
5	8001122	1/2" LOCK WASHER	2
6	8023370	1/2" x 1 1/4" BOLT	2
7	B0219992	RUBBER LATCH	2
8	B024213	13" HOSE CLAMP	2
9	B003014	10" UPPER GEARBOX	1
10	8001107	3/8" LOCK WASHER	6
11	B032135	U-JOINT - 1 1/4" DIA x 1 3/8"-21 SPLINE	1
12	8000200	5/16"x 2 1/2" BOLT	1
13	8000056	5/16" STOVER LOCK NUT	1
14	B689169	1/4" KEY x 1 1/2" LG	1
15	8000967	3/8" x 3/8" SET SCREW	1
16	C103953	10" SPOUT TUBE SEAL	1
17	C106876	10" PLASTIC SPOUT COVER ASSEMBLY	1
NS	B0275036	PLASTIC SPOUT COVER ONLY	
18	8000237	3/8" x 1" BOLT	6
19	C100879	DOWNSPOUT HOSE - 12" ID x 12" LG	1
20	B027500	PLASTIC WEAR BUSHING	10
21	B0090024	50-18 SPROCKET x 1 1/4" BORE	1
22	8000283	3/8" x 3" BOLT - GR.8	2
23	8000761	3/8" LOCK NUT	2
24	B009593	R50-2 x 18 PITCH ROLLER CHAIN	1
25	C100870	RETAINER PLATE	4
26	8000244	3/8" x 1 1/4" BOLT	8
27	B027499	PLASTIC SPACER BUSHING	8
28	8001107	3/8" LOCK WASHER	8
29	C103953	10" SPOUT SEAL FOAM	1
30	B021110	SMALL LATCH ASSEMBLY	2
31	C116461A	10" SWING TUBE ASSEMBLY	1
32	2067461	10" SWING FLIGHT	1
33	B0321125	U-JOINT - 1" x 1"	1
34	B009700	1.25" x .25" WOODRUFF KEY - #810	1
35	C109096	10" LIFTING LUG	1
36	B029664	HP DECAL	2
37	B029310	CLEAN OUT COVER DECAL	1
38	B029090	KEEP HANDS AND FEET CLEAR DECAL	1
39	B029111	MOVING PARTS HAZARD DECAL	1

Swing Hopper Parts

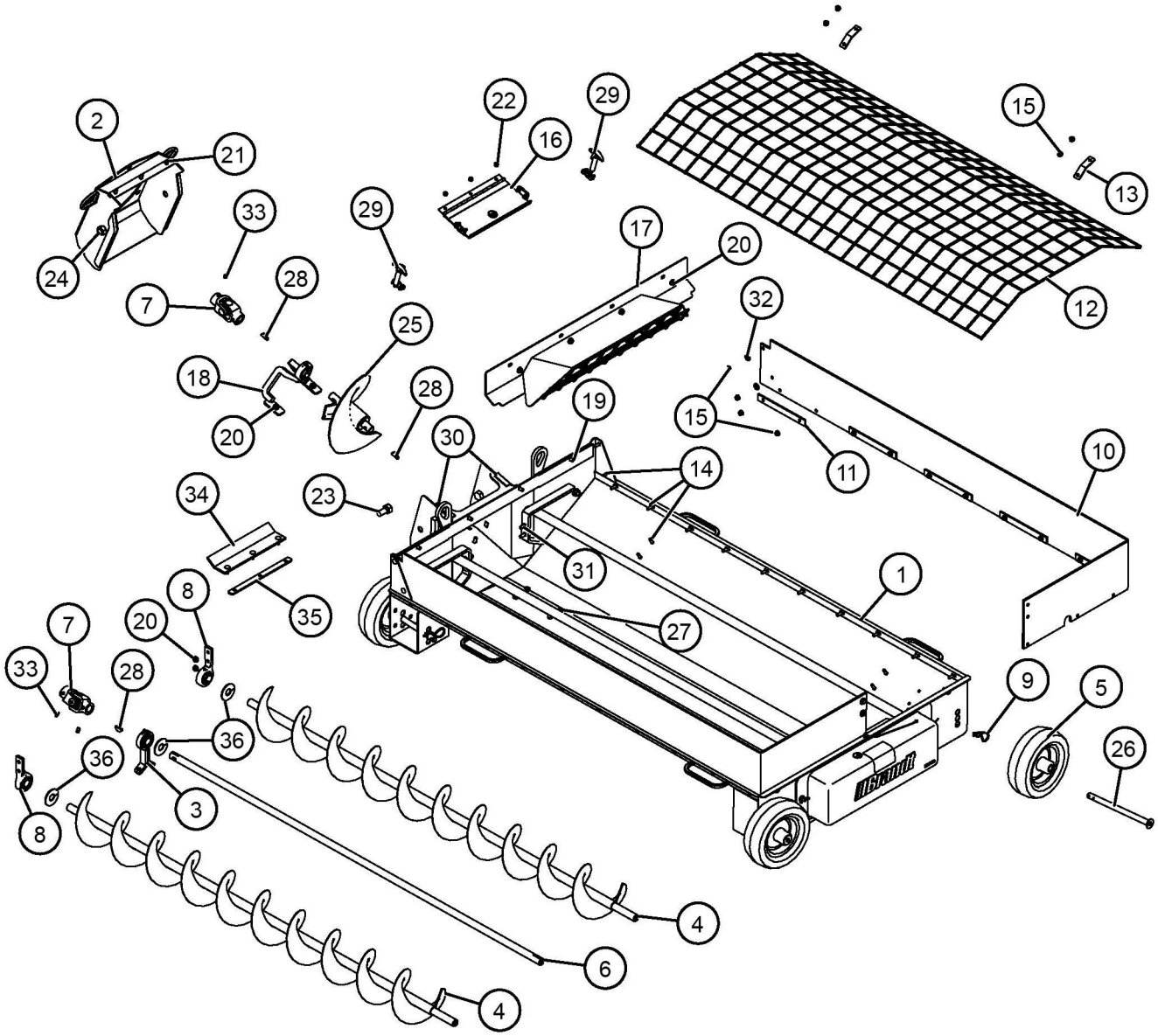

REF #	PART NO.	DESCRIPTION	QTY
1	C118305	10" HP SWING HOPPER WELDMENT	1
2	C118307	10" HP HOPPER TRANSITION	1
3	C116446A	DRIVELINE HANGER ASS'Y c/w BEARING	1
NS	B017261	1" BEARING ONLY	
4	C104009	HOPPER FLIGHT	2
5	B011046	10" SOLID HOPPER TIRE & RIM	4
6	C116445	10" HP HOPPER DRIVESHAFT	1
7	B0321125	1" x 1" U-JOINT - 6R	2
8	C311380	FLIGHT HANGER ASS'Y c/w BEARING	2
NS	B017261	1" BEARING ONLY	
9	B002091	.177" x 3 3/4" HAIR PIN CLIP	4
10	B0210418	RUBBER HOPPER EXTENSION	2
11	B198071	ALUMINUM HOLD DOWN STRAP	12
12	C104010	HOPPER SAFETY GRATE	1
13	B198358	HOPPER MESH RETAINER	4
14	8000174	5/16" x 1" CARRIAGE BOLT	36
15	8000747	5/16" FLANGE LOCK NUT	36
16	C118308	TRANSITION COVER	1
17	C313134	BAFFLE PLATE	1
18	C116447A	10" HP TRANSITION FLIGHT SUPPORT	1
NS	B017261	1" BEARING ONLY	1
19	8000235	3/8" x 1" CARRIAGE BOLT	6
20	8000762	3/8" SERRATED FLANGE NUT	8
21	8000167	5/16" x 3/4" CARRIAGE BOLT	3
22	8000056	5/16" LOCK NUT	3
23	8000526	3/4" x 1 1/2" BOLT	2
24	B001143	3/4" LOCK NUT	2
25	C116448	10" TRANSITION FLIGHT	1
26	B198856	HOPPER WHEEL PIN	4
27	8000240	3/8" x 1" SERRATED FLANGE BOLT	4
28	B009700	1.25" x .25" WOODRUFF KEY - #810	4
29	8020359	LATCH	2
30	C104022	HOPPER FOAM SEAL	2
31	8000242	3/8" x 1 1/4" CARRIAGE BOLT	4
32	8001093	5/16" FLAT WASHER	8
33	8000968	3/8" x 1/2" SET SCREW	4
34	C118301	RUBBER SEAL	1
35	C118488	RUBBER SEAL RETAINER	1
36	B027815	HOPPER BEARING SHIELD	3

Swing Hopper Drive Parts

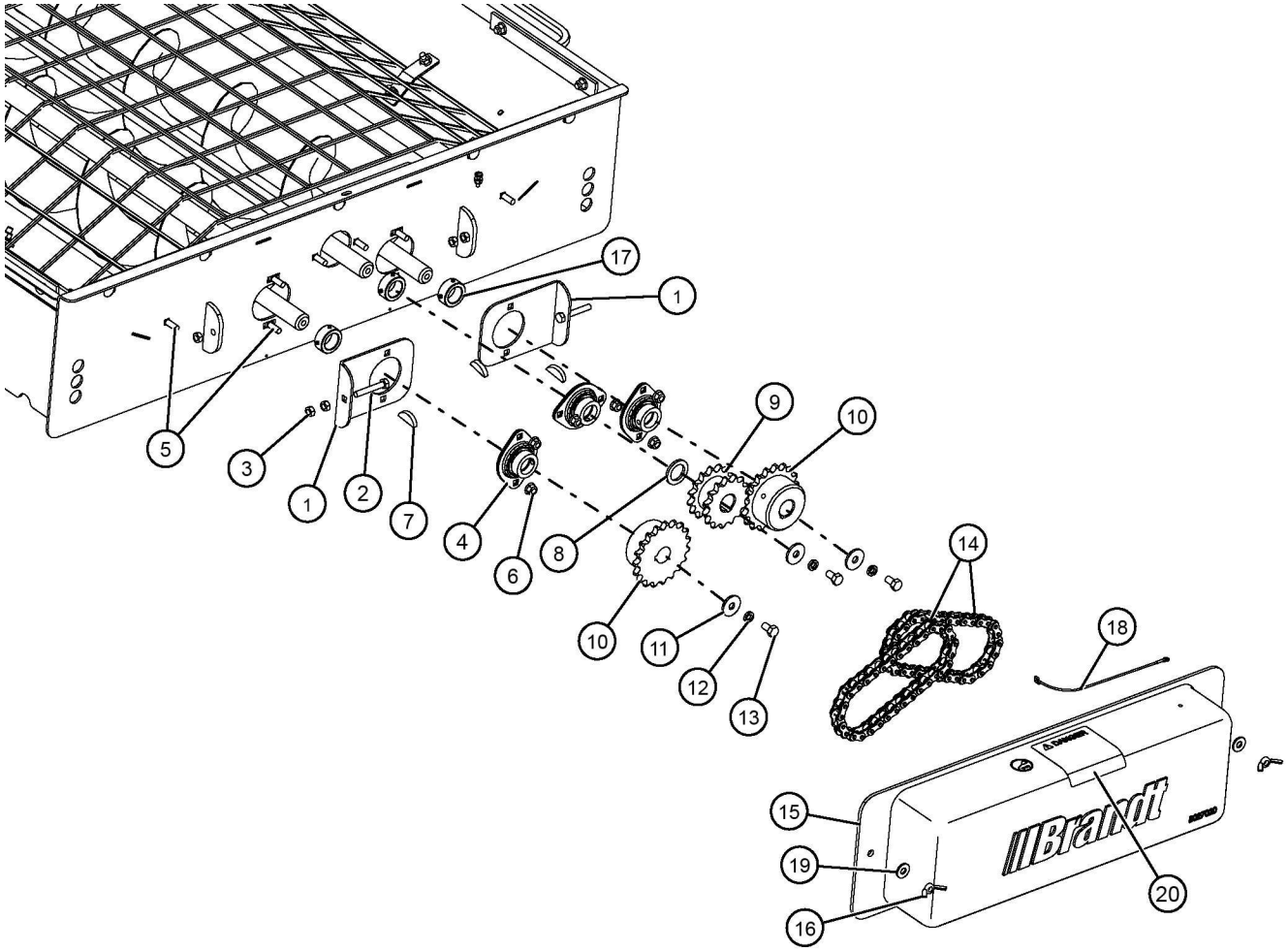

REF #	PART NO.	DESCRIPTION	QTY
1	C104017	CHAIN TENSION PLATE	2
2	8000193	5/16" x 2" FULL THREAD BOLT	2
3	8000739	5/16" HEX NUT	6
4	B017111	1" - 2 BOLT FLANGETTE BEARING	3
5	8000174	5/16" x 1" CARRIAGE BOLT	8
6	8000747	5/16" LOCKING FLANGE NUT	6
7	B009700	1.25" x .25" WOODRUFF KEY - #810	3
8	8001162	1 1/2" OD x 1" ID x 10 GA MACH. BUSHING	1
9	B0090022	50-15 DOUBLE SPROCKET - 1" BORE	1
10	B0094126	50-19 SPROCKET - 1" BORE - EXTENDED HUB	2
11	8001105	1 1/4" OD x 3/8" ID WASHER	3
12	8001107	3/8" LOCK WASHER	3
13	8000230	3/8" x 5/8" BOLT	3
14	B0090056	R50 x 33 PITCH ROLLER CHAIN c/w OFF & CONN	2
15	C104021	HOPPER CHAIN GUARD	1
16	8000748	5/16" WING NUT	2
17	B0210011	1" ID COLLAR	3
18	B008800	24" CABLE LANYARD	1
19	8001093	5/16" FLAT WASHER	2
20	B029111	MOVING PARTS HAZARD DECAL	1

PTO Shaft Parts

1060HP Standard PTO Shaft

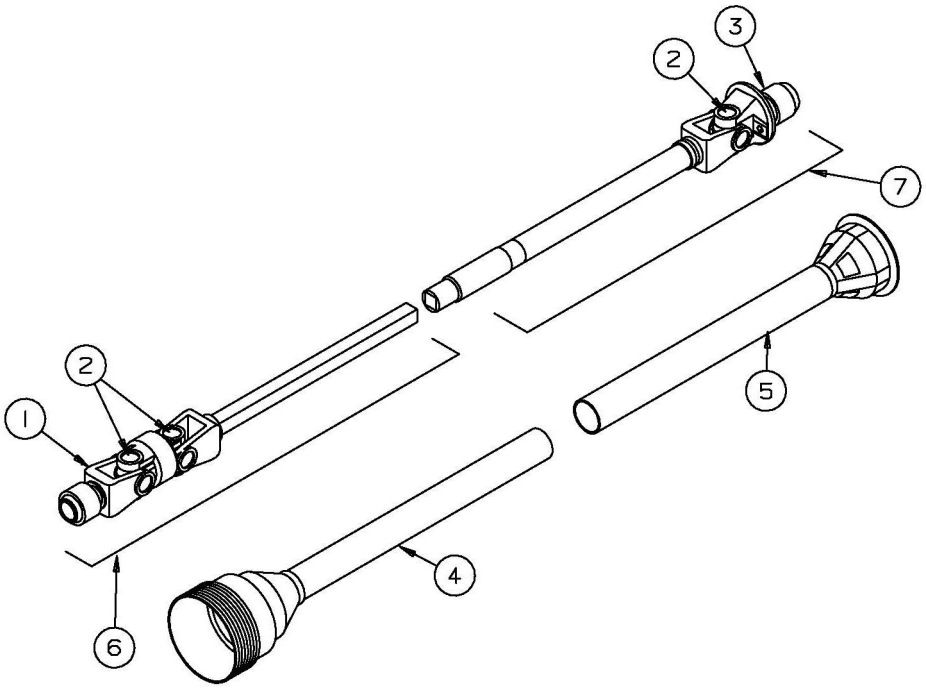

Weasler Series 14E - 50 CV

REF #	PART NO.	DESCRIPTION	QTY
1	B003730	YOKE - 21 SPLINE	1
2	B0037101	CROSS & BEARING KIT	3
3	B00308901	SHEAR YOKE - 6 SPLINE	1
4	B003736	OUTER GUARD	1
5	B003737	INNER GUARD	1
6	B003049A	HALF SHAFT - IMPLEMENT END c/w GUARD	1
7	B003089T	HALF SHAFT - TRACTOR END - c/w GUARD	1
NS	8000177	SHEAR BOLT - 5/16" x 1" - GR.5	2
MS	8000056	SHEAR NUT - 5/16" STOVER LOCK NUT	2
NS	B003089	PTO SHAFT - COMPLETE	1

PTO Shaft Parts

1070HP & 1080HP HD PTO Shaft

(Optional on 1060HP)

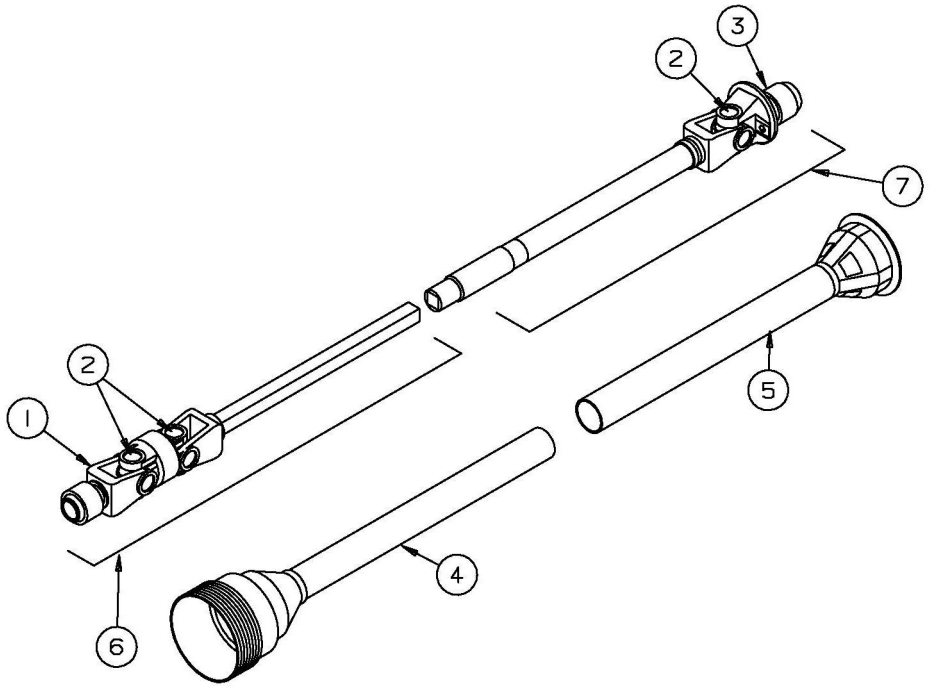

Weasler Series 35E - 50 CV

REF #	PART NO.	DESCRIPTION	QTY
1	B003740	YOKE - 21 SPLINE	1
2	B0037151	CROSS & BEARING KIT	3
3	B003089101	SHEAR YOKE - 6 SPLINE	1
4	B003876	OUTER GUARD	1
5	B003877	INNER GUARD	1
6	B003870	HALF SHAFT - IMPLEMENT END c/w GUARD	1
7	B0030891T	HALF SHAFT - TRACTOR END - c/w GUARD	1
NS	8000017	SHEAR BOLT - 3/8" x 1" - GR.8	1
MS	8014204	SHEAR NUT - 3/8" STOVER LOCK NUT	1
NS	B0030891	PTO SHAFT - COMPLETE	1

Upper Swing Drive Gearbox

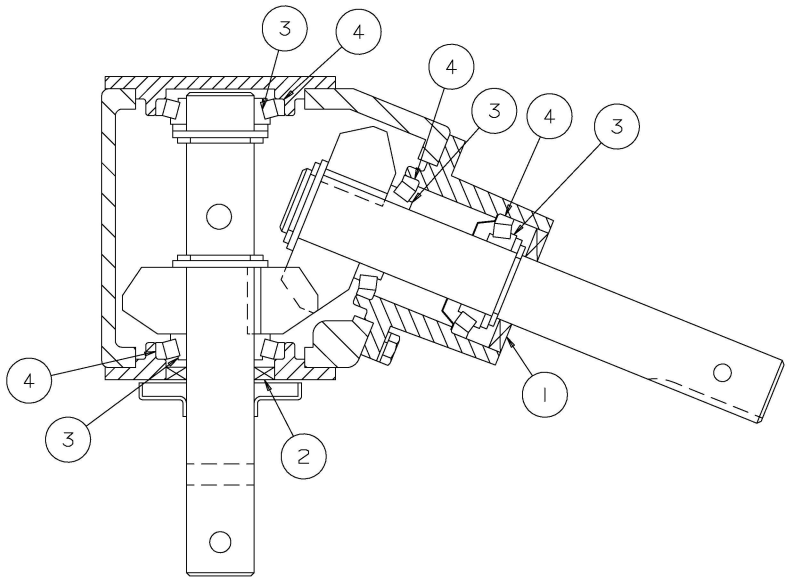

REF #	PART NO.	DESCRIPTION	QTY
1	B00301410	INPUT SHAFT SEAL	1
2	B00301411	OUTPUT SHAFT SEAL	1
3	B011603	BEARING CONE - LM67048	4
4	B011602	BEARING CUP - LM67010	4
NS	B003014	GEARBOX - COMPLETE	1

Lower Swing Drive Gearbox

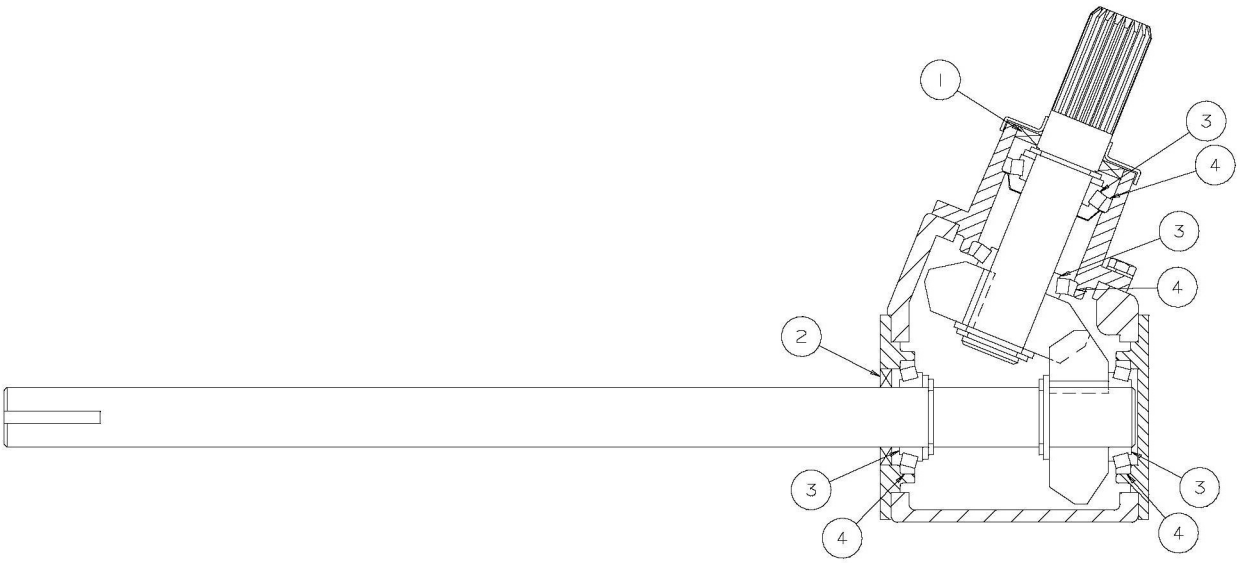

REF #	PART NO.	DESCRIPTION	QTY
1	B00301410	OUTPUT SHAFT SEAL	1
2	B00301411	INPUT SHAFT SEAL	1
3	B011603	BEARING CONE - LM67048	4
4	B011602	BEARING CUP - LM67010	4
NS	B003110	GEARBOX - COMPLETE	1

Reversing Kit

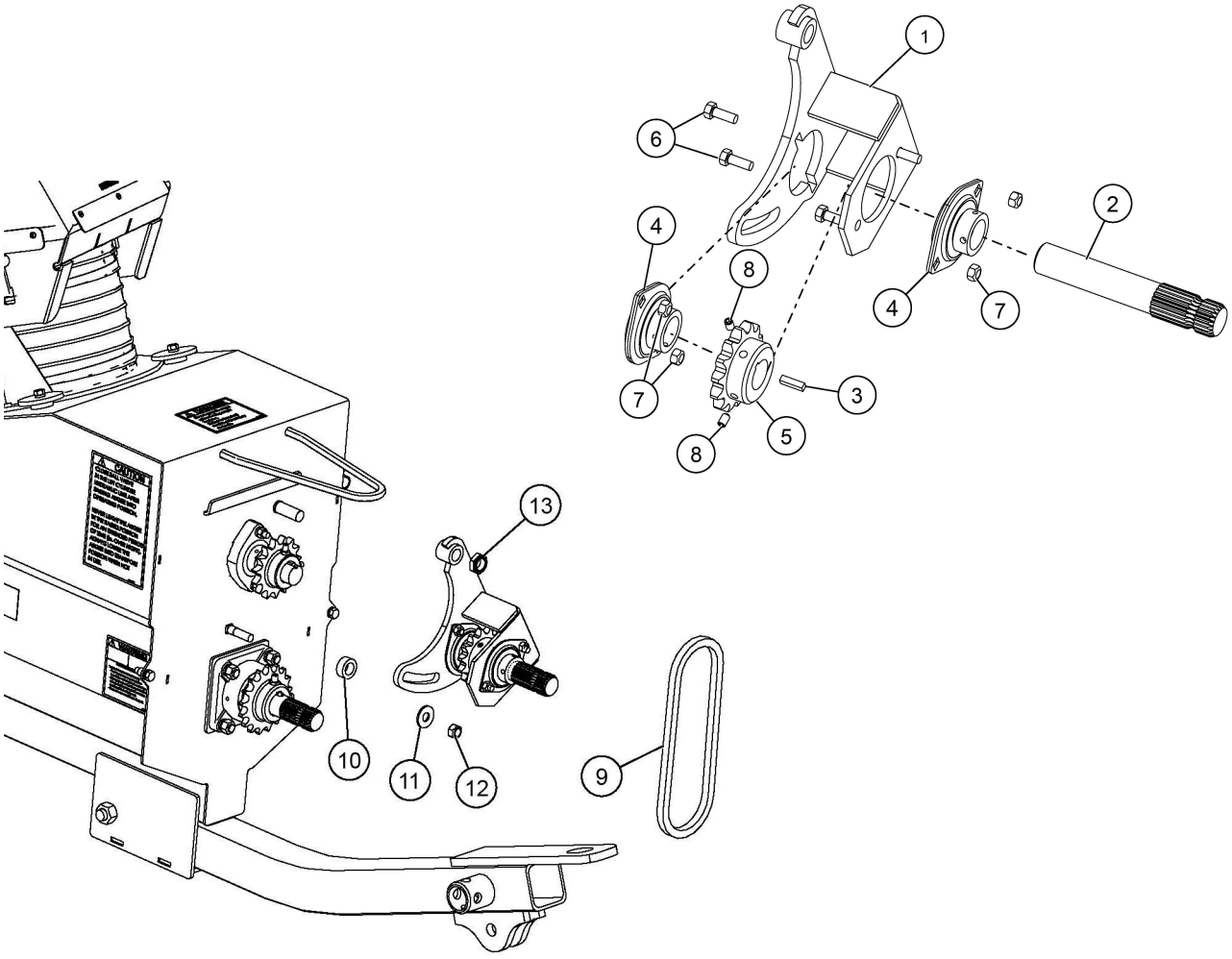

Ref #	Part No.	Description	Qty
1	B194200	REVERSER - MAIN BRACKET	1
2	B032203	REVERSER - SPLINED SHAFT	1
3	B185206	1/4" KEY x 1" LONG	1
4	B017120	1 1/4" BEARING - 2 BOLT FLANGETTE	2
5	B009027	60-14 SPROCKET - 1 1/4" BORE	1
6	8000237	3/8" x 1" BOLT	3
7	8014204	3/8" STOVER LOCK NUT	4
8	8000957	5/16" x 1/2" SET SCREW	2
9	NPN	R60 CHAIN x 41 PITCH	1
10	B194201	1/2" SPACER BUSHING	1
11	8001118	1/2" FLAT WASHER	1
12	8000780	1/2" LOCK NUT	1
13	8000814	3/4" LOCK NUT	1